User: bbaczek
5/5/2008 5:55:18 PM
DWG: \\S10svr01\M\p\0403734\F-DETAILS.dwg DETAIL SHEET47

NOTES:
1. PROVIDE 1/2" EXPANSION JOINT MATERIAL WHERE CURB RAMP ADJOINS ANY RIGID PAVEMENT, SIDEWALK OR STRUCTURE WITH THE TOP OF JOINT FILLER FLUSH WITH ADJACENT CONCRETE SURFACE.
2. SEAL JOINTS WITH AN APPROVED SEALING MATERIAL.
3. PROVIDE SLIP RESISTANT TEXTURE ON CURB RAMP BY COARSE BROOMING TRANSVERSE TO THE SLOPE OF THE RAMP. EXTEND TEXTURE THE FULL WIDTH AND LENGTH OF THE CURB RAMP INCLUDING FLARED SIDE RAMPS.
4. CONSTRUCTION DETAILS SHALL BE MODIFIED TO ADAPT DIMENSIONS TO EXISTING CURB ALTERATIONS WHERE THE CURB IS LESS THAN THE STANDARD 8 INCH HEIGHT.
5. CURB RAMP AND SIDE FLARE LENGTHS ARE APPLICABLE AND BASED ON CURB HEIGHT AND THE SIDEWALK PITCH, REFER TO RC-67 TABLE A, SHEET 2/2, FOR TYPICAL RAMP DIMENSIONS.
6. WHENEVER POSSIBLE, CONSTRUCT THE TRANSITION SLOPE FROM THE CURB RAMP AND FLARE SIDES TO ADJOINING SURFACES WITH A GRADUAL CURVE RATHER THAN AN ABRUPT ANGLE.
7. BUILT UP CURB RAMP TO BE CONSTRUCTED OF BITUMINOUS MATERIALS AS INDICATED, INCLUDING SURFACE PREPARATION AND TACK COAT, AS REQUIRED.
8. DETECTABLE WARNINGS SHALL CONSIST OF RAISED TRUNCATED DOMES WITH A DIAMETER OF NOMINAL 0.9", A HEIGHT OF NOMINAL 0.2" AND CENTER SPACING OF NOMINAL 2.35" AND SHALL CONTRAST VISUALLY WITH ADJOINING SURFACES, EITHER LIGHT-ON-DARK OR DARK-ON-LIGHT. DETECTABLE WARNING SHALL BE 24" IN DIRECTION OF TRAVEL, EXTEND THE FULL WIDTH OF THE CURB RAMP, AND IS LOCATED SO THAT THE EDGE NEAREST THE CURB LINE IS BETWEEN 6 AND 8" FROM THE CURB LINE.

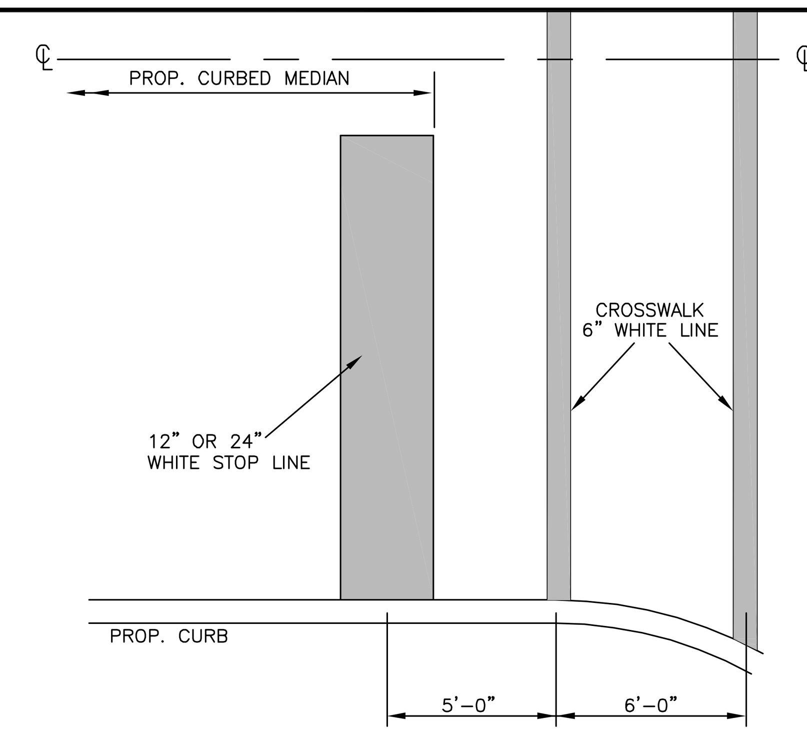

CROSSWALK & STOP BAR DETAIL
NOT TO SCALE

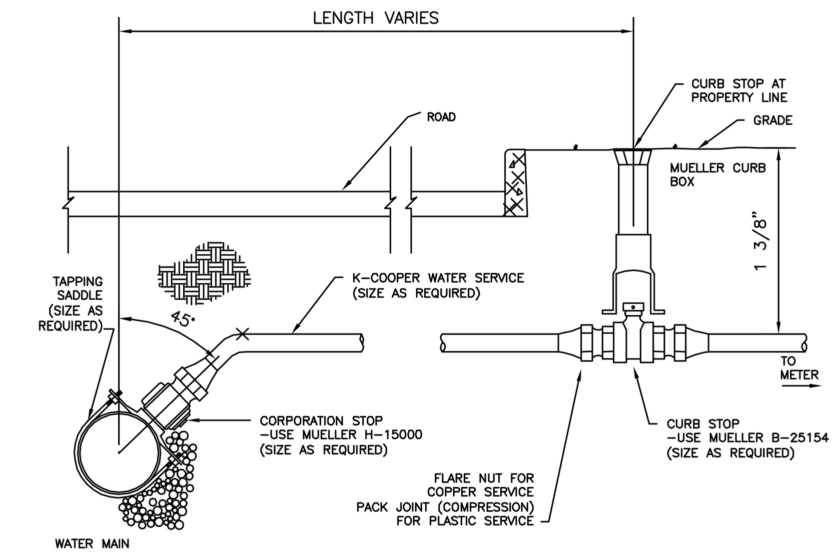

DETAIL OF WATER SERVICE CONNECTION
NOT TO SCALE

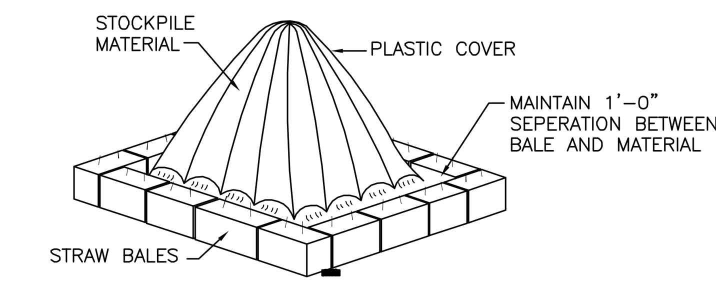

NOTE
STOCKPILE SHALL BE COVERED ENTIRELY BY AN ANCHORED PLASTIC COVER OR SEEDED

STOCKPILE DETAIL
NOT TO SCALE

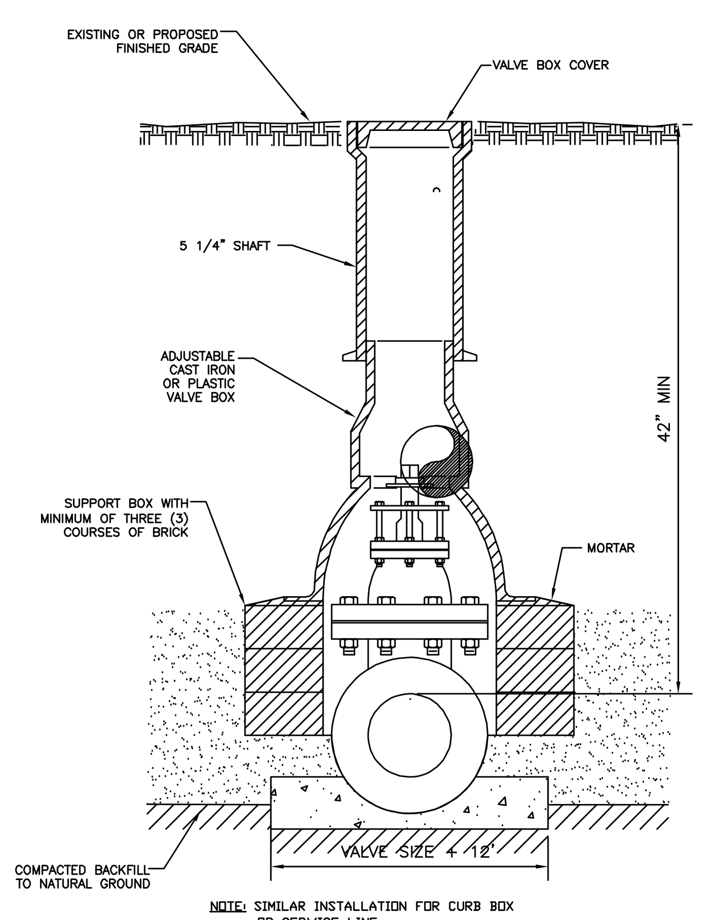

NOTE: SIMILAR INSTALLATION FOR CURB BOX OR SERVICE LINE

VALVE BOX
NOT TO SCALE

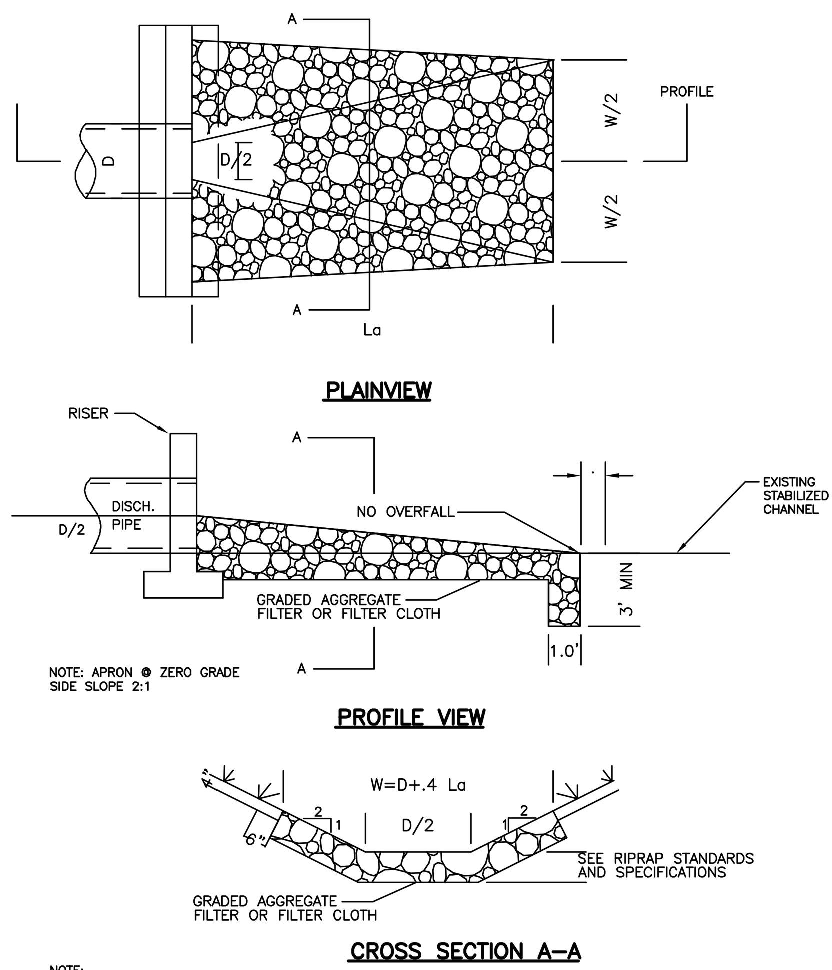

NOTE: SEE RIPRAP STANDARDS AND SPECIFICATIONS MINIMUM TAILWATER CONDITIONS

RIPRAP OUTLET PROTECTION
NOT TO SCALE

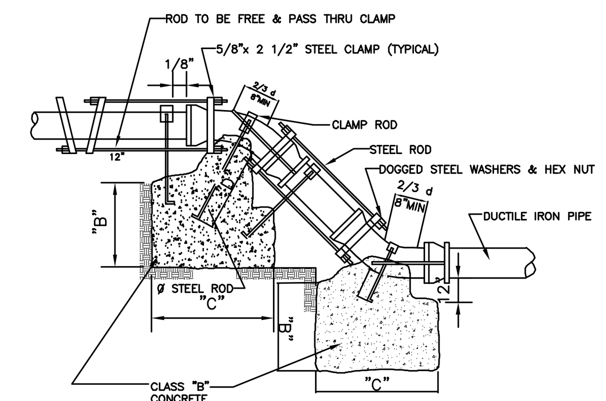

BUTTRESSES & DEFLECTION HARNESSING
NOT TO SCALE

ANCHORAGE							
BEND		PIPE DIAMETER(d)					
		6"	8"	10"	12"	14"	16"
45° 1/8 BEND	A	30"	36"	42"	48"	54"	60"
	B	30"	36"	42"	48"	54"	60"
	C	42"	48"	54"	60"	66"	72"
	D	12"	18"	24"	30"	36"	42"
	ROD DIA	3/4"	3/4"	7/8"	1"	1 1/8"	1 1/8"
22°30' 1/16 BEND	A	24"	30"	36"	42"	48"	54"
	B	24"	30"	36"	42"	48"	54"
	C	30"	36"	42"	42"	48"	54"
	D	12"	12"	18"	24"	30"	36"
	ROD DIA	3/4"	3/4"	3/4"	7/8"	1"	1"
11°15' 1/32 BEND	A	24"	24"	30"	30"	36"	42"
	B	18"	24"	30"	30"	36"	42"
	C	24"	30"	30"	42"	48"	54"
	D	12"	12"	12"	12"	12"	12"
	ROD DIA	3/4"	3/4"	3/4"	7/8"	1"	1"

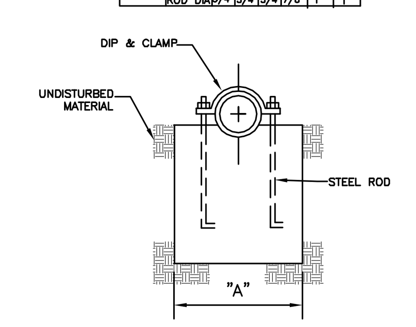

FULL LENGTH CLAMP DETAIL
NOT TO SCALE

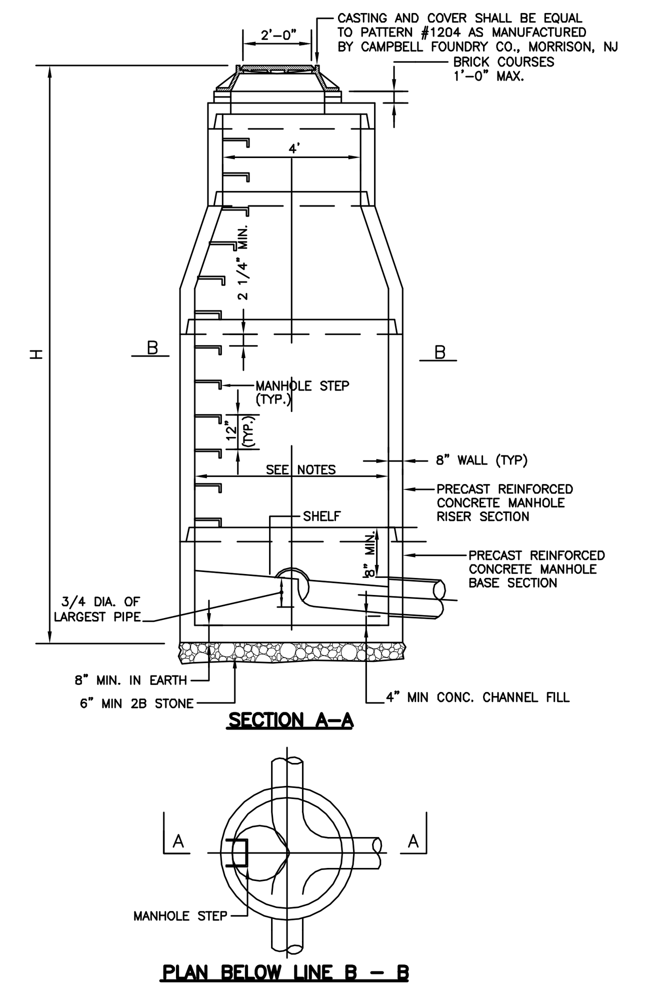

NOTES:
1. THE DEPTH OF THE INVERT CHANNEL SHALL BE EQUAL TO 3/4 OF THE DIAMETER OF THE SEWER.
2. THE SHELF SHALL SLOPE TOWARD THE INVERT CHANNEL AT A RATE OF 1" PER FOOT..
3. TYPE "B" MANHOLES (SHALLOW TYPE) TO BE PROVIDED WHERE REQUIRED BY DEPTH CONDITIONS.
4. SEE THE SPECIFICATIONS FOR LENGTH OF PIPE CONNECTIONS TO MANHOLE.
5. ALL CONCRETE SHALL BE 4000 PSI MINIMUM.
6. ENTIRE OUTSIDE SURFACE OF MANHOLE SHALL RECIEVE TWO COATS OF BITUMINOUS COATING. KOPPERS 300M PENNOXY TAR 32-8-4, OR APPROVED EQUAL.
7. INSTALL 2 LAYERS OF PLASTIC PREFORMED JOINT SEALANT BETWEEN ALL SECTIONS & UNDER FRAME.
8. MANHOLE CONSTRUCTION SHALL BE IN ACCORDANCE WITH ASTM C478
9. MANHOLE STEPS SHALL BE STEEL REINFORCED POLYPROPYLENE.
10. 5' DIA. MANHOLE – FROM 30" TO 40" PIPES OR 8'<H<15'
11. 6' DIA. MANHOLE – FROM 48" TO 60" PIPES OR H>15'
12. MANHOLES THAT RECEIVE FORCE MAIN DISCHARGE OR THAT ARE LOCATED ON INTERCEPTORS OR TRUNK SEWERS SHALL BE CONSTRUCTED WITH A PVC LINE.
13. UNLESS OTHERWISE SPECIFIED, SANITARY SEWER MANHOLES SHALL HAVE LETTERS "SEWER", AND STORM DRAIN MANHOLES SHALL HAVE LETTERS "DRAIN" CAST ON THE COVERS.
14. THE COVER SHALL HAVE VENT HOLES.
15. THE PRECAST CONCRETE STRUCTURE SHALL COMPLY WITH ASTM SPECIFICATIONS C478. ALL SANITARY SEWER MANHOLES ARE TO BE CONSTRUCTED WITH THE COMPRESSION TYPE RESILIENT SEAL ASSEMBLY EQUAL TO "OMEGA CONCRETE PRODUCTS INC.".
16. IT SHALL BE THE CONTRACTOR'S RESPONSIBILITY TO FURNISH AND CONSTRUCT THE PROPER SIZE STRUCTURE INCLUDING THE NECESSARY OPENINGS TO ACCOMODATE THE WORK, AS SHOWN ON THE PLANS OR ORDERED BY THE ENGINEER, AT NO ADDITIONAL COST.
17. ALL NECESSARY PATCHING SHALL BE ACCOMPLISHED WITH A NON-SHRINK CEMENT MOTAR GROUT EQUAL TO "SIKA-SET" AS MANOFACTURED BY THE SIKA CHEMICAL CORPORATION.

STANDARD DEEP MANHOLE
NOT TO SCALE

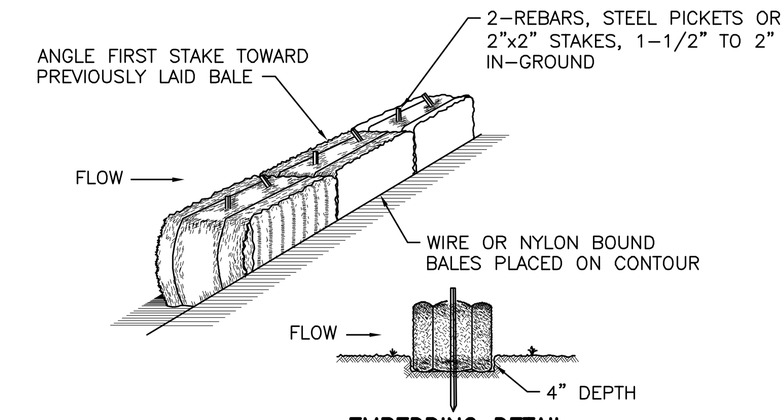

SLOPE MAXIMUM

STEEPNESS	% SLOPE	LENGTH (FT.)
2:1	50	25
3:1	33	50
4:1	25	75

CONSTRUCTION SPECIFICATIONS
1. BALES SHALL BE PLACED AT THE TOE OF A SLOPE OR ON THE CONTOUR AND IN A ROW WITH ENDS TIGHTLY ABUTTING THE ADJACENT BALES.
2. EACH BALE SHALL BE EMBEDDED IN THE SOIL A MINIMUM OF (4) INCHES, AND PLACED SO THE BINDINGS ARE HORIZONTAL.
3. BALES SHALL BE SECURELY ANCHORED IN PLACE BY EITHER TWO STAKES OR RE-BARS DRIVEN THROUGH THE BALE. THE FIRST STAKE IN EACH BALE SHALL BE DRIVEN TOWARD THE PREVIOUSLY LAID BALE AT AN ANGLE TO FORCE THE BALES TOGETHER. STAKES SHALL BE DRIVEN FLUSH WITH THE BALE.
4. INSPECTION SHALL BE FREQUENT AND REPAIR REPLACEMENT SHALL BE MADE PROMTLY AS NEEDED.
5. BALES SHALL BE REMOVED WHEN THEY HAVE SERVED THEIR USEFULLNESS SO AS NOT TO BLOCK OR IMPEDE STORM FLOW OR DRAINAGE.

STRAWBALE SEDIMENT BARRIERS
NTS

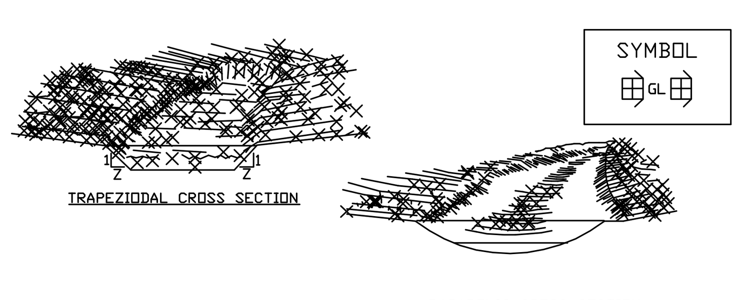

CONSTRUCTION SPECIFICATIONS
1. ALL TREES, BRUSH, STUMPS, OBSTRUCTIONS, AND OTHER OBJECTIONABLE MATERIAL SHALL BE REMOVED AND DISPOSED OF SO AS NOT TO INTERFERE WITH THE PROPER FUNCTIONING OF THE WATERWAY.
2. THE WATERWAY SHALL BE EXCAVATED OR SHAPED TO LINE, GRADE, AND CROSS SECTION AS REQUIRED TO MEET THE CRITERIA SPECIFIED HEREIN, AND BE FREE OF BANK PROJECTIONS OR OTHER IRREGULARITIES WHICH WILL IMPEDE NORMAL FLOW.
3. FILLS SHALL BE COMPACTED AS NEEDED TO PREVENT UNEQUAL SETTLEMENT THAT WOULD CAUSE DAMAGE IN THE COMPLETE WATERWAY.
4. ALL EARTH REMOVED AND NOT NEEDED IN CONSTRUCTION SHALL BE SPREAD OR DISPOSED OF SO THAT IT WILL NOT INTERFERE WITH THE FUNCTIONING OF THE WATERWAY.
5. STABILIZATION SHALL BE DONE ACCORDING TO THE APPROPRIATE STANDARD AND SPECIFICATIONS FOR VEGETATIVE PRACTICES.
   A. FOR DESIGN VELOCITIES OF LESS THAN 3.5 FT. PER. SEC., SEEDING AND MULCHING MAY BE USED FOR THE ESTABLISHMENT OF THE VEGETATION. IT IS RECOMMENDED THAT, WHEN CONDITIONS PERMIT, TEMPORARY WATERWAYS OR OTHER MEANS SHOULD BE USED TO PREVENT WATER FROM ENTERING THE WATERWAY DURING THE ESTABLISHMENT OF THE VEGETATION.
   B. FOR DESIGN VELOCITIES OF MORE THAN 3.5 FT. PER. SEC., THE WATERWAY SHALL BE STABILIZED WITH SOD, WITH SEEDING PROTECTED BY JUTE OR EXCELSIOR MATTING OR WITH SEEDING AND MULCHING INCLUDING TEMPORARY DIVERSION OF THE WATER UNTIL THE VEGETATION IS ESTABLISHED.
   C. STRUCTURAL - VEGETATIVE PROTECTION SUBSURFACE DRAIN FOR BASE FLOW SHALL BE CONSTRUCTED AS SHOWN ON THE STANDARD DRAWING AND AS SPECIFIED IN THE STANDARD AND SPECIFICATIONS FOR SUBSURFACE DRAIN.

GRASSED WATERWAY
NOT TO SCALE

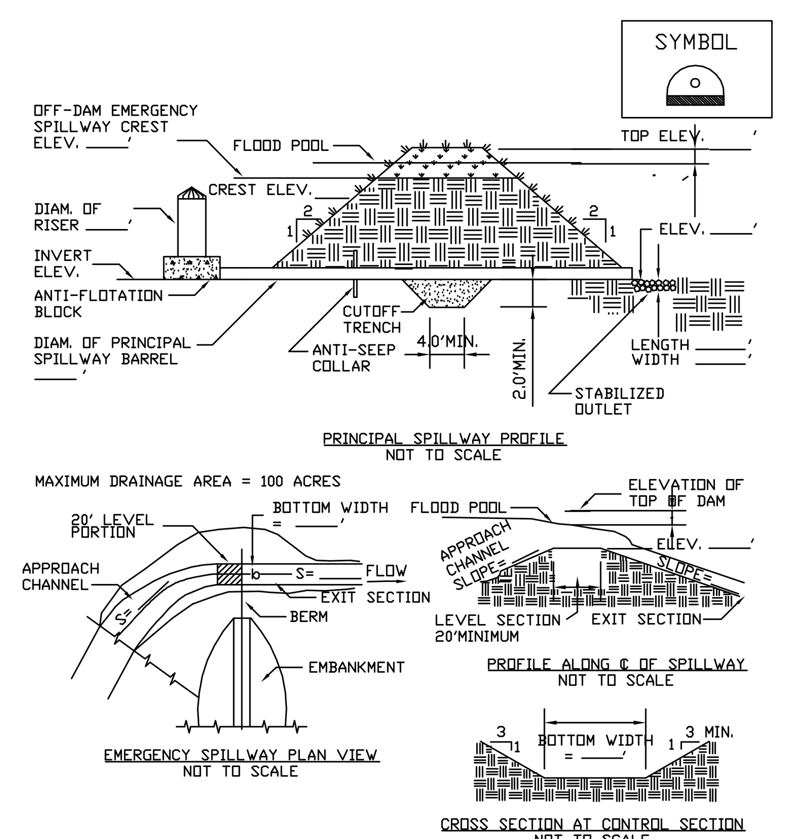

SEDIMENT BASIN DETAILS
NOT TO SCALE

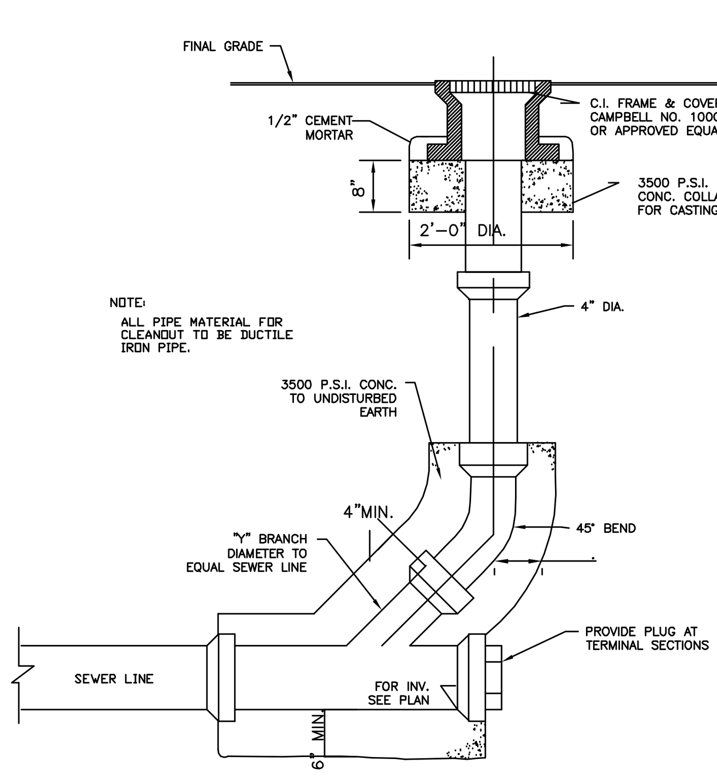

NOTE: ALL PIPE MATERIAL FOR CLEANOUT TO BE DUCTILE IRON PIPE.

SANITARY SEWER CLEANOUT
NOT TO SCALE

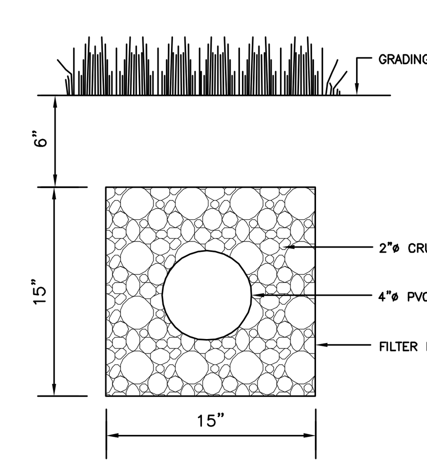

TYPICAL UNDERDRAIN DETAIL
NOT TO SCALE

REVISION NO.	DATE	REVISION
2	5/5/08	DEIS RE-SUBMISSION
1	10/30/07	DEIS SUBMISSION

-NOTICE-
THIS DRAWING AND ALL INFORMATION CONTAINED HEREIN IS AUTHORIZED FOR USE ONLY BY THE PARTY FOR WHOM THE WORK WAS CONTRACTED OR TO WHOM IT IS CERTIFIED.
THIS DRAWING MAY NOT BE COPIED, REUSED, DISCLOSED, DISTRIBUTED OR RELIED UPON FOR ANY OTHER PURPOSE WITHOUT THE WRITTEN CONSENT OF SCHOOR DEPALMA INC.
COPYRIGHT 2006 SCHOOR DEPALMA INC.
ALL RIGHTS RESERVED

N 0 N E
GRAPHIC SCALE IN FEET

W. CHARLES UTSCHIG, JR.
PROFESSIONAL ENGINEER, N.Y. LIC. No. 62303

SCHOOR DEPALMA
Engineers and Consultants
NEW JERSEY • PENNSYLVANIA • NEW YORK • FLORIDA • ARIZONA • MARYLAND
DAMIANO LONG • a division of SCHOOR DEPALMA

1311 MAMARONECK AVENUE
SUITE 50
WHITE PLAINS, NY 10605
TEL (914)686-1000
FAX (914)686-1222

DETAILS (SHEET 4 OF 4)
BASHER KILL SUBDIVISION
ORANGE COUNTY HOLDINGS LLC

TOWN OF DEERPARK ORANGE COUNTY NEW YORK

PROJECT NO	DATE
0403734	09/29/06
DRAWN BY: JP	DESIGNED BY: K.C.
SCALE: N.T.S	CHECKED BY: D.M.
SCHOOR DEPALMA	
SHEET NO. 47 of 47	